LONE STAR DRILLS

Water Well Drilling Rig

LS100 · LS200

OPERATOR'S MANUAL

1.800.227.7515

LONESTARDRILLS.COM

MFG BY: Little Beaver, Inc.
1017

LITTLE BEAVER®
EARTH DRILLS & AUGERS

littlebeaver.com sales@littlebeaver.com

P.O. Box 840, Livingston, Texas 77351

Phone: 936.327.3121 Fax: 936.327.4025

CUSTOMER SERVICE
Ph: 800/227-7515 or 936/327-3121 or Fax 936/327-4025

ORDERS...

Place your orders by telephone, fax, or mail. When calling, please have your parts manual handy for reference. Our hours are 8:00 am - 4:30 pm central time, Monday thru Friday. When ordering by mail or fax, include a description and LITTLE BEAVER part number for the items you are ordering, your return address, and payment or your authorization for COD shipment.

All orders are shipped UPS where possible. Freight charges will be added to your invoice. Some items are oversize, resulting in a higher shipping cost. Power units and larger augers are shipped via motor freight due to their weight.

PAYMENT TERMS...

COD, Cash in Advance, Visa, Mastercard or NET 30 with approved credit. COD limit for new accounts is $500.00. Personal or company checks on new accounts will be held until they clear the bank. To eliminate this delay, you may pay by wire transfer or send a certified or cashiers check. For a NET 30 open account, please call or write for a credit application.

SERVICE AND REPAIR...

Your Lone Star Hydraulic Water Well Drill Rig has been designed for user repair with ordinary hand tools. No special tools are required. Consult the appropriate section of the parts manual for instructions.

Service or technical consulation is available, free of charge, from the factory in Livingston, Texas. We will be pleased to help you with any problems or questions. Just write, fax, or call. Our hours are 8:00am - 4:30pm central time, Monday thru Friday.

Factory repair is available. If you return a part to the factory, please include the following information: Your name and return address, a description of the problem and payment or authorization to return the repaired item COD for the repair and shipping charges.

RETURNS...

Please call the factory for a return authorization. This will help to ensure that your parts are handled properly. Include your name and address, customer account #, invoice # under which the returned parts were ordered, and a brief description of the problem with the parts or the reason for returning them. Parts to be considered for warranty must be returned to the factory for inspection within 10 days after receipt of replacement parts. Be sure to prepay the shipping charges, we will not accept collect or COD packages.

Our mailing address...

LITTLE BEAVER, Inc.
P. O. Box 840
Livingston, Texas 77351

SAFETY ALERT SYMBOL

The symbol shown above is used to call your attention to instructions concerning your personal safety**. WATCH THIS SYMBOL** — It points out important safety precautions. It means — **ATTENTION! BECOME ALERT! YOUR PERSONAL SAFETY IS INVOLVED!**

Read the message that follows and be alert to the possibility of *Personal Injury or Death!*

1 YEAR LIMITED WARRANTY

For 1 year from the date of original purchase, LITTLE BEAVER, INC. will replace for the original purchaser, free of charge, any part or parts, found upon examination by any factory authorized service center, or by the factory at Livingston, Texas, to be defective in material or workmanship or both. If your equipment can not be repaired, it will be replaced. All transportation charges on parts submitted for replacement under this warranty must be borne by purchaser.

The following parts are specifically excluded from this warranty: Belts, centrifugal clutches or components thereof and wear items such as auger flighting, point, blades or teeth.

There is no other express warranty.

Implied warranties, including those of merchantability and fitness for a particular purpose, are limited to 1 year from purchase and to the extent permitted by law. Any and all implied warranties are excluded. This is the exclusive remedy and liability for consequential damages under any and all warranties are excluded to the extent exclusion is permitted by law.

*Notice: Engines are warrantied by the manufacturer of the engine. See separate engine warranty enclosed.

MACHINE SERIAL NUMBER

The machine serial number for your Lone Star Hydraulic Water Well Drill Rig is located on the back side the mast, just below the draw-works bracket. For your convenience, when requiring service or parts information, refer to this number and your model number. Record the model number, machine serial number and date of purchase in the space provided below:

MODEL NUMBER _____

MACHINE SERIAL NUMBER _____

DATE OF PURCHASE _____

TABLE OF CONTENTS

OPERATORS MANUAL

Scope of Manual

This manual is intended to provide instruction in the safe operation of the drill rig. It is not a complete well drilling reference. Additional information on siting, drilling and completing a water well can be found in the LIFEWATER DRILLING AND WELL CONSTRUCTION REFERENCE MANUAL.

SAFETY INSTRUCTIONS

WARNING: Failure to observe safety instructions and reasonable safety practices can cause Property Damage Serious Bodily Injury and/or Death. BE CAREFUL!! WATCH OUT FOR BYSTANDERS!!

DANGER: NEVER drill holes where there is a possibility of underground power cables or other hazards. The exact location of underground services must be determined prior to drilling. Inadvertent severing of telephone, fiber optic or CATV transmission cable, or damage to sewer pipe is costly; RUPTURING OF GAS OR WATER LINES CAN CAUSE SERIOUS BODILY INJURY AND/OR DEATH. COMING INTO CONTACT WITH BURIED POWER LINES CAN CAUSE SERIOUS BODILY INJURY, SEVERE BURNS, AND/OR ELECTROCUTION. Call local utility companies or your local "One-Call" number at least 48 hours before digging and have underground utilities marked.

DANGER: NEVER run engine inside building or enclosed area. Exhaust gases contain carbon monoxide, an odorless and deadly poison.

DANGER: Keep the machine and drilling tools away from overhead electric wires and devices. Electrocution can occur without direct contact. Failure to keep away will result in Serious Injury and/or Death.

CAUTION:

1. Read and understand this operator's manual before operating.
2. Read and understand the operator's manual for the Mud Pump.
3. Keep all safety shields and devices in place.
4. Make sure everyone is clear before operating.
5. Keep hands, feet and clothing away from moving parts.
6. Shut off engine to adjust, service, clean or re-fuel.
7. Lower rotary head before moving the machine.
8. Never operate drill with damaged or missing parts.
9. Do not leave machine unattended with engine running.
10. Wear safety glasses.

NOTICE

It is the responsibility of the contractor, owner and user to maintain and operate the Lone Star Hydraulic Water Well Drill Rig in compliance with operating instructions provided. Observe all listed safety instructions and other reasonable safety practices. LITTLE BEAVER, INC. accepts no responsibility for damages to this machine, and other property damage and/or bodily injury due to careless or improper operations.

LITTLE BEAVER, INC. does not recommend or condone any unauthorized modifications to the Lone Star Hydraulic Water Well Drill Rig

LITTLE BEAVER, INC. reserves the right to make changes in design and changes for improvements upon its product without imposing any obligation upon itself to install the same upon its products theretofore manufactured.

Your operator's manual offers recommendations for prolonged and satisfactory service

MAINTENANCE AND LUBRICATION

CAUTION: **Shut off power** to adjust, service, or clean the machine.

CAUTION: **Keep** all safety shields and devices in place.

IMPORTANT: Keep all nuts, fasteners, and fittings properly torqued. Refer to torque chart (inside back cover)for proper assembly torque.

RECOMMENDED GREASE: Mobilgrease XHP 462 Moly or equivelant grease containing molybdenum NLGI No. 2 Grade

GREASE BOLTS:

The 3 grease bolts should be greased every 8 hours of operation using the recommended grease. Apply grease through the grease fittings which are accessible from the side of the mast, top and bottom, and the side of the draw-works drive bracket. See Figure 1.

SLIDE PADS AND RAILS:

The slide pads and rails should be kept clean and free of dirt and grease build-up. The pads are made of UHMW plastic and do not require lubrication.

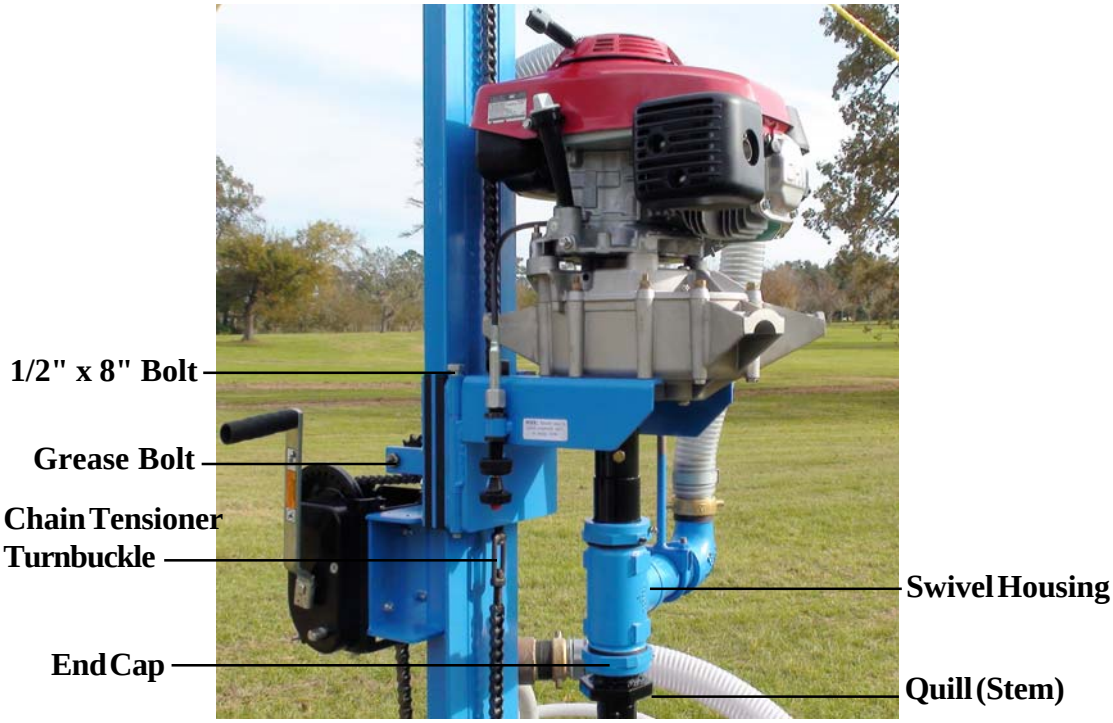

Figure 1

MAINTENANCE AND LUBRICATION CONT...

DRIVE CHAIN:

The drive chain should be checked for tightness every 4 hours of operation and lubricated if necessary. To adjust, tighten chain tensioner turnbuckle by hand or with the aid of a screwdriver. the chain tensioner turnbuckle is attached to the bottom of the shuttle plate. See figure 1. Tighten the turnbuckle until the chain has very little slack. If the slack cannot be taken up completely, remove a link from the chain. If the chain becomes dry, lubricate the chain with a heavy weight oil or grease.

IMPORTANT: Check the base of the drill mast periodically, around the bottom sprocket, to determine if dirt build-up is present. Clean away the dirt build-up if present.

WATER SWIVEL:

This machine is equipped with a water swivel which requires regular greasing and adjustment. It is very important to continually monitor the swivel for any leakage of drilling fluid (mud) past the seals while drilling. It is critical to stop the leakage as soon as it is detected to prevent permanent damage resulting from abrasive particles in the drilling fluid scoring and eroding the sealing surface area of the quill (under the seals). Please follow the instructions below to ensure best operation.

If leakage is detected from the swivel seals:
Stop drilling and circulate drilling fluid long enough to clear cuttings from hole. Redirect drilling fluid to pit or stop mud pump. Pump grease into top and bottom end caps. See figure 1. Loosen locking set screws and tighten end caps until leakage stops. Re-tighten locking set screws.
Note: It may be necessary to repeat this process during the drilling operation.

If routine greasing and tightening of the end caps fails to stop the leakage, it is time to replace the swivel seals.

Replacing swivel seals:
Stop drilling and circulate drilling fluid long enough to clear cuttings from hole. Raise drill head and remove last joint of drill pipe (see “Tripping Out of the Borehole”). Stop drill engine and lower drill head to a height for easy access to swivel assembly. Be sure to cover drill pipe and borehole to prevent accidental loss of parts or tools.

Remove swivel assembly by disconnecting delivery hose and loosen or remove bolt(s) at top of swivel support rod. See figure 2. Support the weight of swivel assembly while removing the adapter bolt which attaches the swivel assembly to the hex drive shaft. Remove swivel assembly from drive shaft.

MAINTENANCE AND LUBRICATION CONT...

Loosen the two end caps and slide swivel housing from quill. Remove end caps from swivel housing. Remove and discard worn seals. Clean and inspect quill for wear in the seal contact areas. If severe wear is present, adjacent surface areas may be used for new seal area when reassembling.

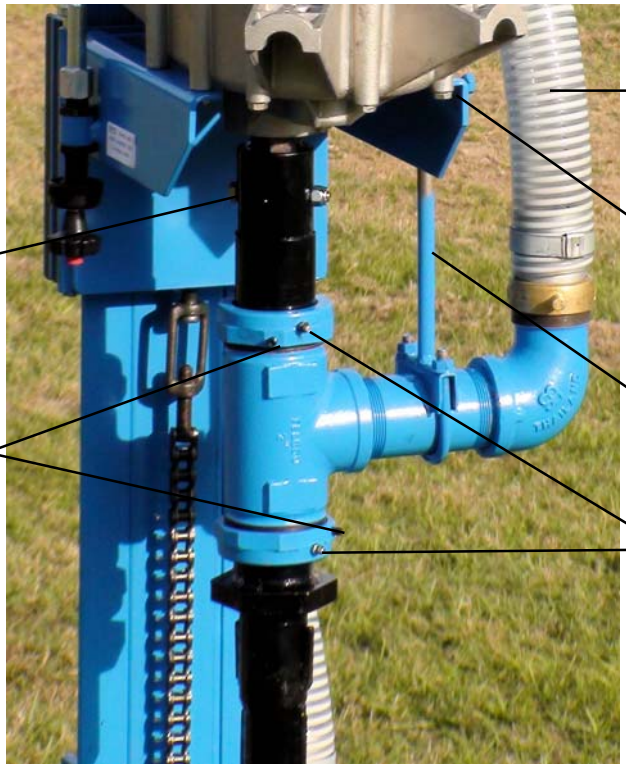

Figure 2

Clean swivel housing and end caps. Install new swivel seals. IMPORTANT: Be sure the small drilled hole in swivel seal is visible above the end of the housing when properly installed (it may be necessary to turn seal over because the holes in the swivel seals are drilled off center). Screw on end caps until snug (do not tighten). Slide swivel housing onto quill and tighten end caps until the seals grip the quill and begin to resist free rotation. Lock end caps in place with locking set screws.

Attach swivel assembly to hex drive shaft using the adapter bolt. Adjust position of swivel housing on quill using the swivel support rod and secure in position with locking bolt.

IMPORTANT: Swivel housing should <u>not</u> be resting on hex nut on bottom of quill. Allow at least 1/8 inch clearance between the bottom end cap and hex nut.

Grease new swivel seals with grease gun through grease fittings on each end cap. Grease should be seen between quill and end cap when seals have been completely packed with grease. Be aware that it may be necessary to add more grease and/or tighten end caps to prevent mud leakage once drilling resumes.

DRILL PIPE:

Always lubricate the drill pipe threads with pipe joint compound before making up each connection. After use, clean both male (pin) and female (box) threads with a wire brush to remove dirt and grease residue. Replace the cap on the pin end. Clean all foreign matter from the pipe before storing.

DRILL BITS:

After use, clean the female (box) threads with a wire brush to remove dirt and grease residue. Clean all foreign matter from the bit before storing.

CAUTION: **NEVER** operate drill rig with damaged or missing parts.

CAUTION: **MAKE SURE EVERYONE IS CLEAR BEFORE OPERATING.**

CAUTION: Read and understand your operator's manual for the mud pump.

CAUTION: Read and understand your operator's manual for the engines.

CAUTION: Read and understand your operator's manual for the gear box.

OPERATING INSTRUCTIONS:

DANGER: **NEVER** drill holes where there is a possibility of underground power cables or other hazards. The exact location of underground services must be determined prior to drilling. Inadvertent severing of telephone, fiber optic or CATV transmission cable, or damage to sewer pipe is costly; RUPTURING OF GAS OR WATER LINES CAN CAUSE SERIOUS BODILY INJURY AND/OR DEATH. COMING INTO CONTACT WITH BURIED POWER LINES CAN CAUSE SERIOUS BODILY INJURY, SEVERE BURNS, AND/OR ELECTROCUTION. Call local utility companies or your local One-Call number at least 48 hours before digging and have underground utilities marked.

DANGER: Keep machine and drilling tools away from overhead electric wires and devices. Electrocution can occur without direct contact. Failure to keep away will result in serious injury and/or death.

DANGER: **NEVER** run engine inside building or enclosed area. Exhaust gases contain carbon monoxide, an odorless and deadly poison.

PRE-DRILLING SETUP:

Site Preparation:

Select a site that is suitable to safe operation of the equipment. It should be as level as possible so that the rig can be set up and leveled with minimal cribbing and the operator and helpers will have safe footing at all times. The mud pits should be positioned down-slope from the rig.

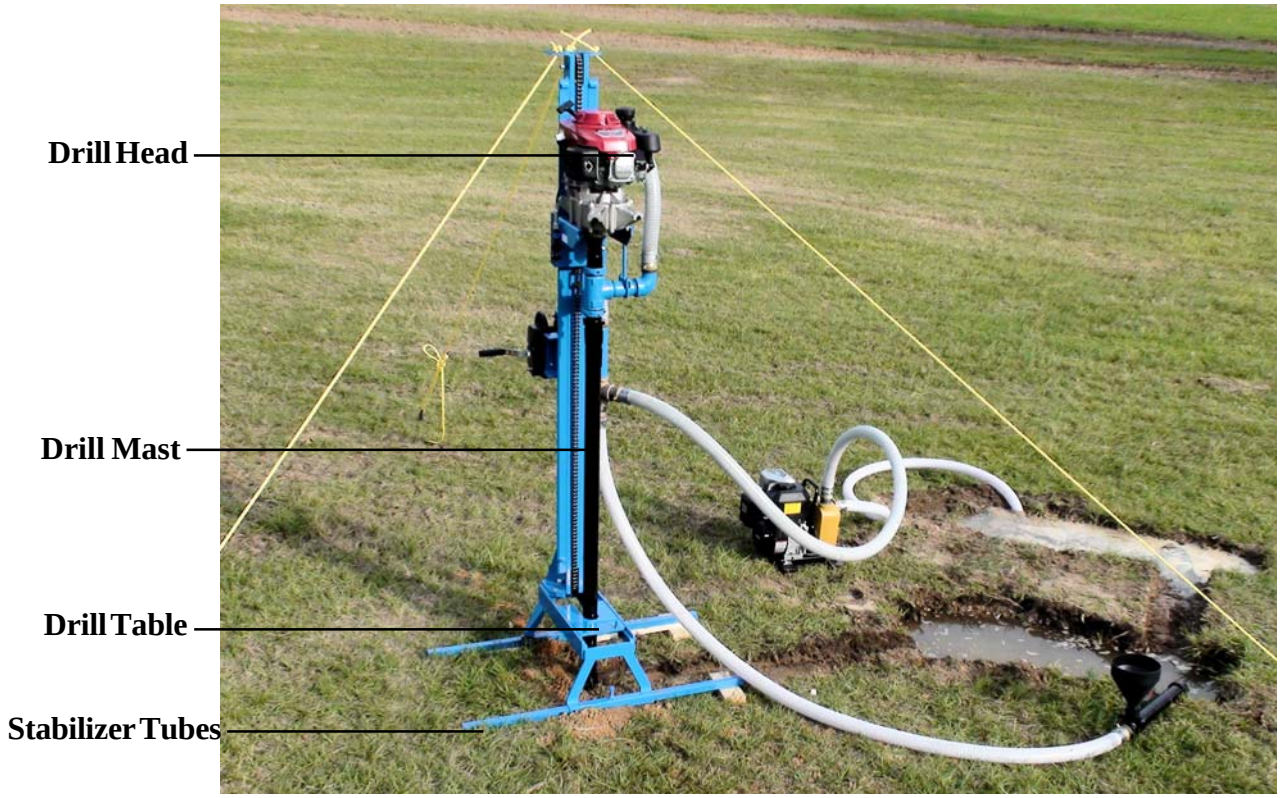

Figure 3

OPERATING INSTRUCTIONS Cont...:

Rig Assembly:

Assemble drill table, stabilizer tubes, and drill mast. See figure 3. To reduce potential settling, 2 x 6 boards may be placed under stabilizer tubes. Increased stability may be gained by attaching three ropes (guys) to top of drill mast and anchor to stakes positioned evenly around drill rig. Level the drill rig using a level on two adjacent surfaces of drill mast (it may be necessary to adjust by digging out high spots). Attach drill head using two ½" x 8" bolts.

Position mud pump near the suction pit and lay out mud hoses. Connect the mud hoses. The hose from the center of the 3-way valve connects to the mud pump discharge (top side); the hose from the bottom of the 3-way valve connects to the mud mixer. Position mud mixer to discharge into settling pit and anchor by driving spike. The suction hose with foot valve connects to the mud pump suction inlet.

⚠ **CAUTION:** Read and understand the operator's manual for the engine and gearbox of the drill head.

DRILL HEAD CONTROLS:

The engine of the drill head is equipped with a centrifugal clutch which disengages rotary at low rpm (idle) and engages rotary at high rpm. Use throttle to control rotary speed when making pipe connections. However, while drilling, maximum rotary speed (full throttle) should be maintained.

The winch is used to raise and lower the drill head. While drilling, maintain slight back pressure on winch handle. Do not allow the handle to make one revolution in less than 20 seconds. This maximum speed will allow cuttings to be flushed from hole even when drilling is relatively easy. Drilling speeds will be greatly reduced in harder formations.

DRILLING PROCEDURE:

⚠ **CAUTION:** Keep all safety shields and devices in place.

⚠ **CAUTION:** Make certain everyone is clear before operating.

⚠ **CAUTION:** Read and understand the operator's manual for the mud pump.

Before starting the mud pump, place the 3-way valve in the bypass position. Fill the pits, prime the mud pump and start the mud pump by following the procedures found in the mud pump operator's manual. Let it run until good circulation is established.

Raise the drill head to a convenient height to pull the engine starting rope and start engine. Raise drill head to within 6" of the top stops. Be careful not to jam the shuttle plate into the stops, either top or bottom, as this can cause undue stress on the draw-works drive components and the mast. Apply pipe joint compound to the threads of the swivel stem, the first drill pipe, and the bit. Screw the drill pipe onto the swivel stem by hand, then slowly lower the pipe through the slip plate. Screw the bit onto the end of the pipe by hand.

DRILLING PROCEDURE Cont.....:

To start drilling, lower the rotary drive head until the bit just contacts the ground. Place the 3-way valve in the drilling position so that drilling fluid flows out the bit. Increase engine speed to engage clutch and allow bit to begin rotating.

Use the winch to control the rate of feed of the drill bit. Be careful not to move it too fast or the bit can become plugged. While drilling, maintain slight back pressure on winch handle. Do not allow the handle to make one revolution in less than 20 seconds. This maximum speed will allow cuttings to be flushed from hole even when drilling is relatively easy. Drilling speeds will be greatly reduced in harder formations. Monitor the cuttings to make sure the feed rate is correct for the type of soil being cut. Harder soils will require more feed force.

Continue drilling the pipe down until the drill head comes to the bottom of its travel. Move the slip plate to allow the top of the drill pipe to go about 2 inches below the top of the drill table. Continue circulating drilling mud and let the drill head remain at the bottom for an adequate time to allow the cuttings to clear. Rotation may be stopped by reducing throttle to idle. Monitor the up-hole flow to determine when all the cuttings have been removed. Failure to adequately clear the cuttings may result in the bit being trapped as the cuttings fall to the bottom of the hole when the fluid flow is diverted.

Raise the rotary drive head far enough to allow the slip plate to fit around the drill pipe. It may be necessary to rotate drill pipe in order to position the breakout lugs in line with the opening in the slip plate, then lower the drill head so that the bottom of the tool joint is 1-1/2" above the slip plate. This distance will allow the drill pipe to be unscrewed from quill as the slip plate engages the breakout lugs top prevent the drill pipe from turning.

Place the 3-way valve in the bypass position to divert the flow of drilling fluid back to the pits. Use the large hex wrench to unscrew quill from the top of the drill pipe (allow lugs on wrench to rest on quill hex). The swivel stem pin (male thread) will “break out” of the drill pipe and when the pipe is completely unscrewed it will drop free and fall into the slip plate. Carefully following this procedure will ensure that the threads of the swivel stem and drill pipe remain undamaged.

NOTE: If the drill pipe fails to drop free of swivel stem pin then the cuttings were not completely removed from the hole.

ADDING PIPE:

- Raise the rotary drive head to the top of the mast, stopping at least 1" below the top stop.
- Apply pipe joint compound to the threads of the swivel stem and the drill pipe.
- Screw the new pipe into the box threads of the pipe resting in the slip plate. Don’t completely tighten. Position the swivel stem threads about 1/2" above the top of the new pipe.
- Increase engine speed until quill starts to slowly rotate.
- Slowly lower drill head with swivel stem threads rotating as the threads start to engage. It may be necessary to have a helper hold the pipe to position it in alignment with the swivel stem threads.
- Continue to let the drill head move downward as the threads, both top and bottom set, “make up”.

- Just as the threads begin to tighten (both top and bottom sets) Reduce engine speed to idle to stop rotaion.
- Raise the drill head and pipe string so that the slip plate may be removed.
- Place the 3-way valve in the drilling position, wait to make sure circulation is re-established and fluid comes out the borehole, and continue as above.

COMPLETING THE BOREHOLE:

When the borehole is completed to the required depth, the drill pipe should be removed. Be sure to allow time for the drilling fluid to circulate and completely clear the hole of cuttings. Monitor the outflow to determine when the hole is clear.

COMING OUT (TRIPPING OUT):

> **NOTE:** Coming out of the borehole should be done quickly to minimize the possibility of the borehole collapsing.
>
> **NOTE:** This is the time when drill pipe is most likely to be dropped down the hole. Follow these steps carefully to prevent this from happening.

- Place the 3-way valve in the bypass position. The mud pump is no longer needed and can be shut off.

For M50 Pipe (LS100)

1. Raise the drill head far enough to allow slip plate to be pushed around the drill pipe closest to swivel. See Figure 4. Insert a C-wrench below the tool joint and on top of the slip plate (this will allow pipe to be lifted with C-wrench once connection with quill is broken). The bottom of tool joint should be at least 1" above C-wrench.

2. Use hex wrench to unscrew quill from top of drill pipe (allow lugs on wrench to rest on quill hex). When the quill is unscrewed sufficiently, the drill pipe should drop down onto the C-wrench.

3. Raise the drill head to height where it can be swiveled above the 3-way valve. Remove one of the hinge bolts, pivot the drill head, and secure it out of the way.

IMPORTANT: Keep back as vertical as possible by bending legs, as required, during the lifting procedure.

Figure 4

4. Three people are required to remove the pipe from the hole. Two people will use the C-wrenches to lift the pipe. The third person will work the slip plate and coordinate the lifting. The first person begins by using the C-wrench, which is under the tool joint, to lift the pipe off of the slip plate. The second person slips the other C-wrench under the first person's C-wrench as soon as there is room to do so and helps lift the pipe. Together they lift only a short stroke by straightening their legs until the third person stops the lift by saying "**HOLD**".

5. The first person (with C-wrench on top) takes full weight of drill pipe and says "**I HAVE**".

6. At this signal, the second person (with C-wrench on bottom) relaxes and slides their C-wrench down to get a new grip (without disengaging the wrench from around pipe) and when ready to take full weight of pipe says "**I HAVE**".

7. At this signal, the first person (with C-wrench on top) relaxes and slides their C-wrench down to get a new grip (without disengaging the wrench from around pipe) and when ready to take weight of pipe says "**LIFT**".

8. Together they lift only a short stroke by straightening their legs until the third person stops the lift by saying "**HOLD**".

9. Repeat steps 5 through 8 until the next tool joint is about to reach the slip plate. The third person pulls the slip plate out of the way only when tool joint can be lifted clear in one stroke. In this way, the slip plate can be pushed back around the drill pipe immediately after tool joint is lifted above table.

10. The first person (with C-wrench on top) takes full weight of drill pipe and says "**I HAVE**".

11. At this signal, the second person (with C-wrench on bottom) relaxes and slides their C-wrench down to get a new grip below the next tool joint (must briefly disengage wrench from around pipe to do this). When the second person (with C-wrench on bottom) is ready to take full weight of pipe, they say "**DOWN**".

12. Together, they lower weight of the pipe onto the slip plate with a C-wrench underneath the tool joint. Note: If lugs on pipe do not line up with the slot of slip plate, the pipe will need to be lifted and rotated until lugs line up and pipe may be lowered onto slip plate with the bottom C-wrench underneath the tool joint.

13. Break threaded connection by using 24" pipe wrench (and aid of sharp hammer blow if connection is too tight).

14. Remove drill pipe by unscrewing by hand.

15. Repeat steps 4 through 14 until all drill pipe and bit is pulled from the borehole. If possible, bring the bit up through the slip plate and then replace the slip underneath before unscrewing the last pipe and bit. Place a cover over the borehole to protect it from falling objects until the casing is ready to be placed.

For M250 Pipe (LS200)

1. Raise the drill head far enough to allow slip plate to be pushed around the drill pipe closest to swivel. The bottom of tool joint should be at least 1" above slip plate.
2. Use hex wrench to unscrew quill from top of drill pipe (allow lugs on wrench to rest on quill hex). When the quill is unscrewed sufficiently, the drill pipe should drop down onto the slip plate.
3. Raise the drill head to height where it can be removed. Remove the hinge bolts to remove the drill head. Attach hoist bracket assembly to shuttle plate using the hinge bolts as shown in figure 5.

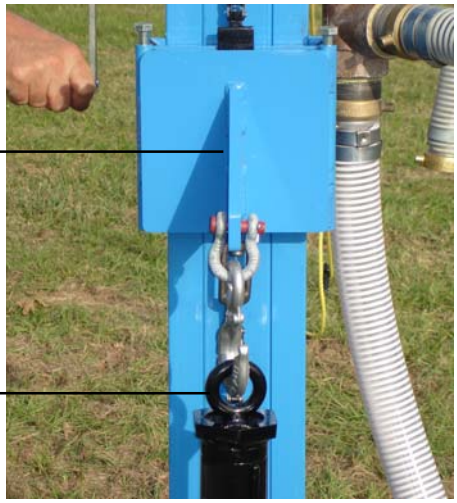

Figure 5

4. Connect hoist plug to top of drill pipe by hand.

> **NOTE:** Make sure the threads are adequately engaged. Failure to do so can result in the pipe dropping off the hoist plug.

5. Lower hoist bracket assembly to connect hook to hoist plug.

6. Lift drill pipe by raising the hoist bracket.

7. Raise the hoist bracket far enough to allow slip plate to be pushed around the next drill pipe. Lower hoist bracket until bottom of tool joint is resting on slip plate.

8. Break threaded connection by using 24" pipe wrench (and aid of sharp hammer blow if connection is too tight).

9. Remove drill pipe by unscrewing by hand.

10. Repeat steps 4 through 9 until all drill pipe and bit is pulled from the borehole. If possible, bring the bit up through the slip plate and then replace the slip underneath before unscrewing the last pipe and bit. Place a cover over the borehole to protect it from falling objects until the casing is ready to be placed.

NOTES:

IMPORTANT: All nuts, fasteners, and fittings must be kept tightened. Refer to torque chart for proper assembly torque.

TYPE / SIZE	HEX HEAD GRADE 5	HEX HEAD GRADE 8	WRENCH SIZE (inch)		WRENCH SIZE
No. 4	8 in lb	12 in lb	1/4"	12 in lb	3/32"
No. 6	16 in lb	23 in lb	5/16"	21 in lb	7/64"
No. 8	30 in lb	41 in lb	11/32"	42 in lb	9/64"
No.10	43 in lb	60 in lb	3/8"	60 in lb	5/32"
1/4"	8 ft lb	12 ft lb	7/16"	12 ft lb	3/16"
5/16"	17 ft lb	25 ft lb	1/2"	24 ft lb	1/4"
3/8"	30 ft lb	45 ft lb	9/16"	43 ft lb	5/16"
7/16"	50 ft lb	70 ft lb	5/8"	69 ft lb	3/8"
1/2"	75 ft lb	110 ft lb	3/4"	105 ft lb	3/8"
9/16"	110 ft lb	150 ft lb	13/16"	158 ft lb	-----
5/8"	150 ft lb	220 ft lb	15/16"	195 ft lb	1/2"
3/4"	260 ft lb	380 ft lb	1-1/8"	353 ft lb	5/8"

HYDRAULIC FITTINGS

SIZE	TORQUE	SIZE	TORQUE
1/4 NPT	25 ft.lb.	7/16-20 SAE O-Ring	12 ft.lb.
3/8 NPT	50 ft.lb	9/16-18 SAE O-Ring	20 ft.lb.
1/2 NPT	75 ft.lb.	3/4-16 SAE O-Ring	35 ft.lb.
3/4 NPT	110 ft.lb.	7/8-14 SAE O-Ring	50 ft.lb.
		1-1/16-12 SAE O-Ring	70 ft.lb.

THINK SAFETY FIRST!

LITTLE BEAVER, INC.
P.O. BOX 840 ● LIVINGSTON, TEXAS 77351
PHONE 936/327-3121 ● FAX 936/327-4025
Web: www.littlebeaver.com ● E-Mail: sales@littlebeaver.com

Recommended Drilling Equipment Set-up

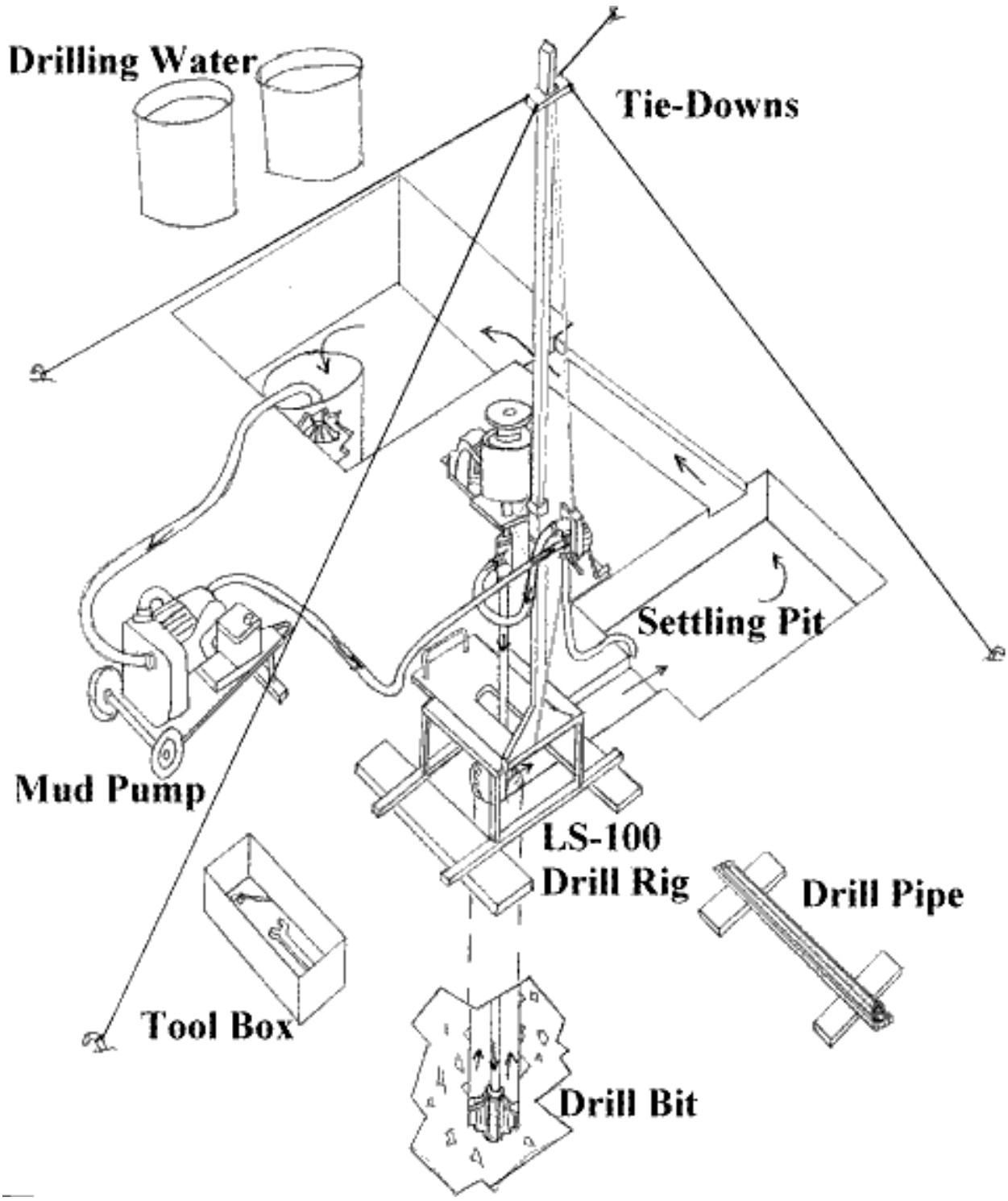

LS200BRP-G Basic Rig, Gasoline (Petrol)
LS100BRP-G Basic Rig, Gasoline (Petrol)

LS200BRP-D Basic Rig, Diesel
LS100BRP-D Basic Rig, Diesel

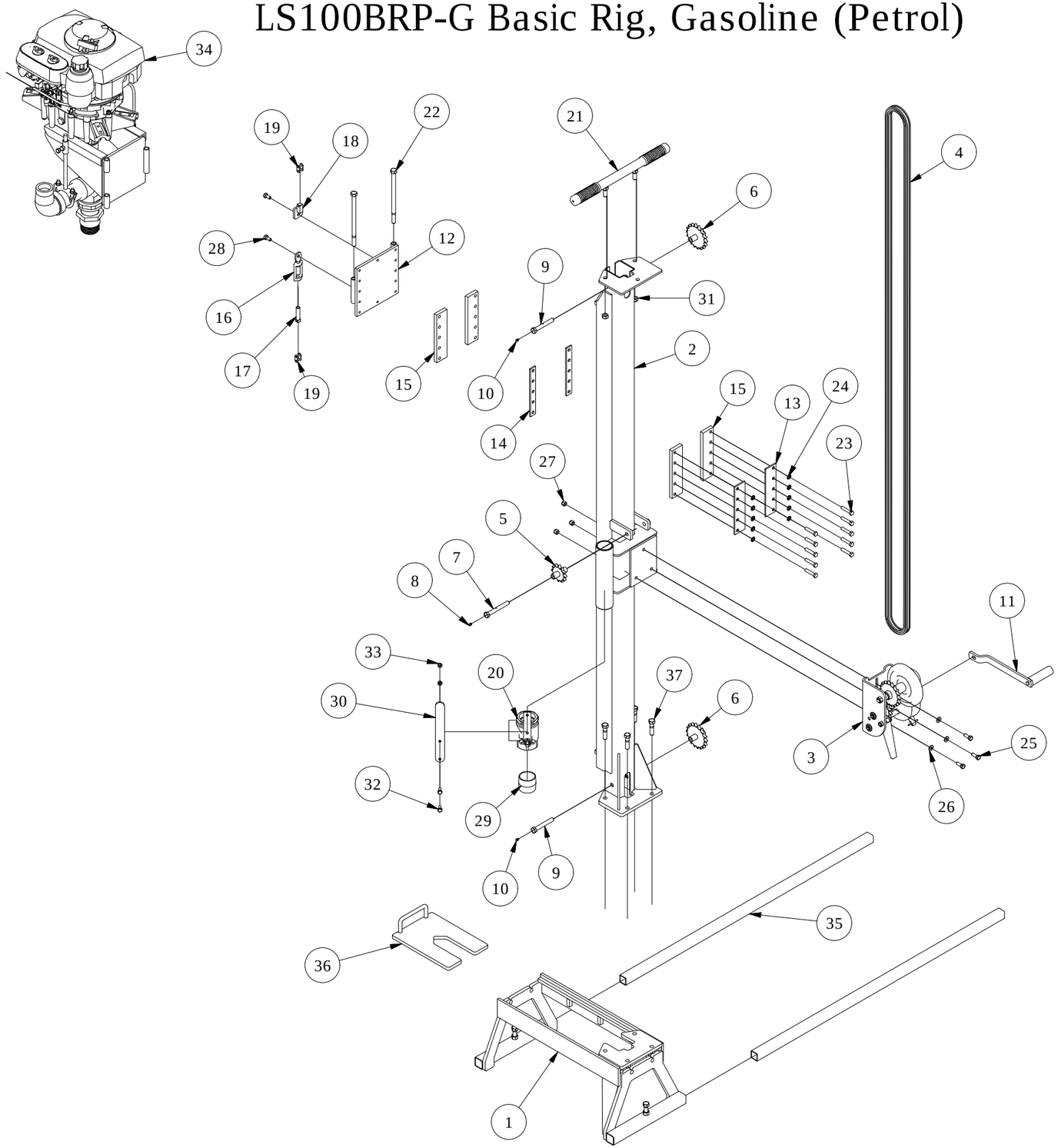

BASIC RIG PARTS LIST			
ITEM	QTY	PART NUMBER	DESCRIPTION
1	1	LS200TBA	TABLE BASE ASSEMBLY
2	1	LS200MW	MAST WELDMENT
3	1	LS200WA	WINCH ASSEMBLY (INCLUDES DL70328)
4	1	9-36511	ROLLER CHAIN, #50
5	1	LS200MISAM	MAST IDLER SPROCKET
6	2	LS200MISACB	MAST IDLER SPROCKET, ENDS
7	1	FC10069653	GREASE BOLT, 1/2 X 4 (INCLUDES 73427)
8	1	73427	GREASE FITTING, 3/16 DRIVE
9	2	FC10069654	GREASE BOLT, 1/2 X 3-1/2 (INCLUDES 73427)
10	1	73427	GREASE FITTING, 3/16 DRIVE
11	1	DL70328	DL2500B WINCH HANDLE
12	1	LS200SHUT	SHUTTLE PLATE
13	2	LS200-023	COVER PLATE, WEAR PAD
14	2	LS200-024	SPACER PLATE, WEAR PAD
15	4	BPL100521	UHMW WEAR PAD
16	1	70133	CHAIN TENSIONER, 1/2"
17	1	70134	CHAIN ADJUSTER BOLT, 1/2"
18	1	70135	ANCHOR, CHAIN, #50
19	2	GR6L092	CONNECTING LINK, #50
20	1	FEA7060801	2" 3-WAY BALL VALVE
21	1	LS100CHA	CROWN HANDLE ASSEMBLY
22	2	FC13230	BOLT, HEX, 1/2 X 8-1/2
23	10	KT030	BOLT, HEX, 3/8 X 1-3/4, NC GR.5
24	10	70306	WASHER, INTERNAL STAR LOCK, 3/8
25	3	3012-2	BOLT, HEX, 3/8 X 1, NC GR.5
26	3	3002-B	WASHER. FLAT, 3/8 SAE
27	3	30154	NUT, HEX, 3/8 NC, NYLON LOCK
28	2	70199	BOLT, HEX. 3/8 X 3/4, NC GR.5
29	1	70227	NIPPLE, CLOSE, 2"
30	1	70422	HANDLE EXTENSION
31	2	KT055	NUT, HEX, 1/2 TOP LOCK
32	2	3012-1T	BOLT, HEX, 5/16 X 3/4, NC GR.5
33	2	30318	NUT, HEX, 5/16 NYLON LOCK
34	1	LS200RPUHA	HONDA ROTARY POWER UNIT FOR LS200
34	1	LS100RPUHA	HONDA ROTARY POWER UNIT FOR LS100
34	1	LS200HDRPUA	HATZ ROTARY POWER UNIT FOR LS200
34	1	LS100HDRPUA	HATZ ROTARY POWER UNIT FOR LS100
35	2	LS100SLT	TUBE, STABILIZER
36	1	LS200SLPA	DRILL PIPE SLIP, M250
36	1	LS100SLPA	DRILL PIPE SLIP, M50
37	4	6532	BOLT, HEX, 1/2 X 2, NC GR.5

LS200BRP-D Basic Rig, Diesel
LS100BRP-D Basic Rig, Diesel
LS200BRP-G Basic Rig, Gasoline (Petrol)
LS100BRP-G Basic Rig, Gasoline (Petrol)

LS200RPUHA Honda Rotary Power Unit For LS200
LS100RPUHA Honda Rotary Power Unit For LS100
LS200HDRPUA Hatz Rotary Power Unit For LS200
LS100HDRPUA Hatz Rotary Power Unit For LS100

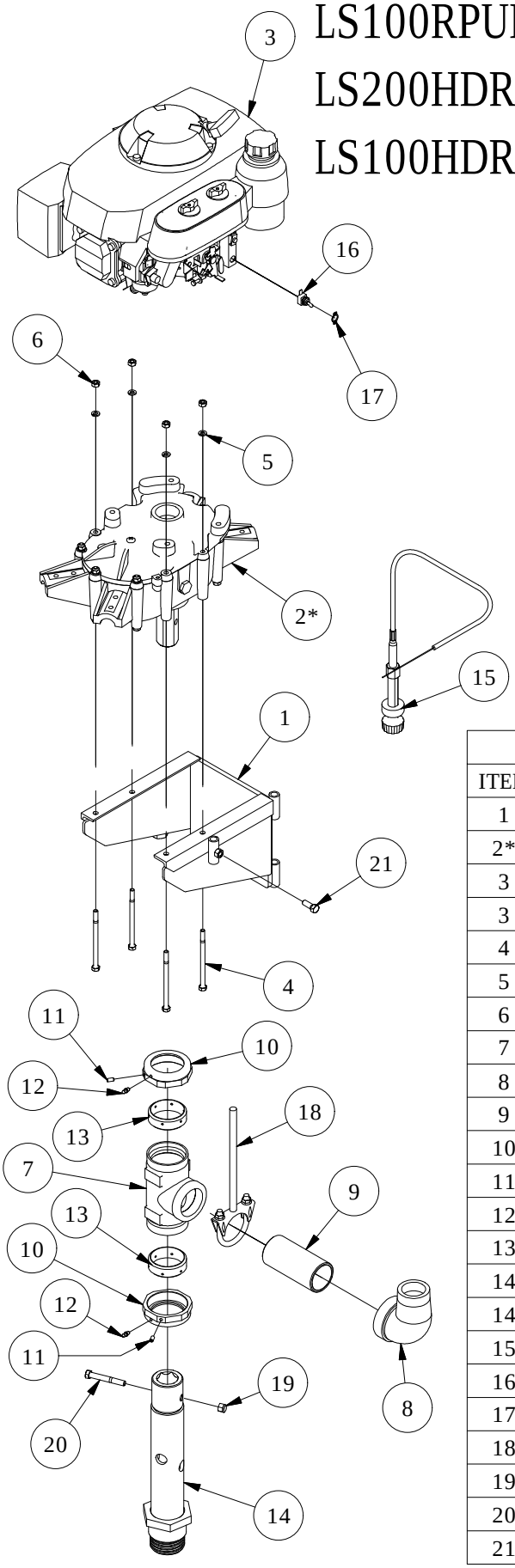

ROTARY POWER UNIT PARTS LIST			
ITEM	QTY	PART NUMBER	DESCRIPTION
1	1	LS200EMFA	ENGINE MOUNT FRAME ASS'Y
2*	1	GEM330HTRAN	TRANSMISSION
3	1	70395	ENGINE, HONDA, 5.5 HP VERT. SHAFT
3	1	CP1B20V-9311	ENGINE, HATZ DIESEL VERT. SHAFT
4	4	70173	BOLT, HEX, 5/16 X 5 NC
5	4	3002-C	WASHER, LOCK, 5/16
6	4	3002-D	NUT, HEX, 5/16 NC
7	1	73354	TEE ONLY, SWIVEL HOUSING
8	1	70129	STREET ELBOW, 2"
9	1	73314	NIPPLE, 2 NPT X 5
10	2	73355	COMPRESSION NUT, MACHINED
11	2	70208	SCREW, SET, 1/4-28 X 1/2
12	2	9036	GREASE FITTING, 1/4 NF
13	2	LS200SSS	SWIVEL SEAL
14	1	LS200QLA	QUILL ASSEMBLY FOR M250 DRILL PIPE
14	1	LS100QLA	QUILL ASSEMBLY FOR M50 DRILL PIPE
15	1	GL952A02-B1S	THROTTLE CABLE
16	1	3007-21	SWITCH, KILL, TOGGLE (HONDA ONLY)
17	1	3007-31	PLATE, ON/OFF, SWITCH (HONDA ONLY)
18	1	70118	ROD, SWIVEL STOP
19	1	30154	NUT, HEX, 3/8 NC, NYLON LOCK
20	1	70180	CAP SCREW, 3/8 X 2-3/4, GR.8
21	1	3012-2	BOLT, HEX, 3/8 X 1, NC GR.5

* Refer to appendix A for details of transmission internal components

LS200WA Winch Assembly

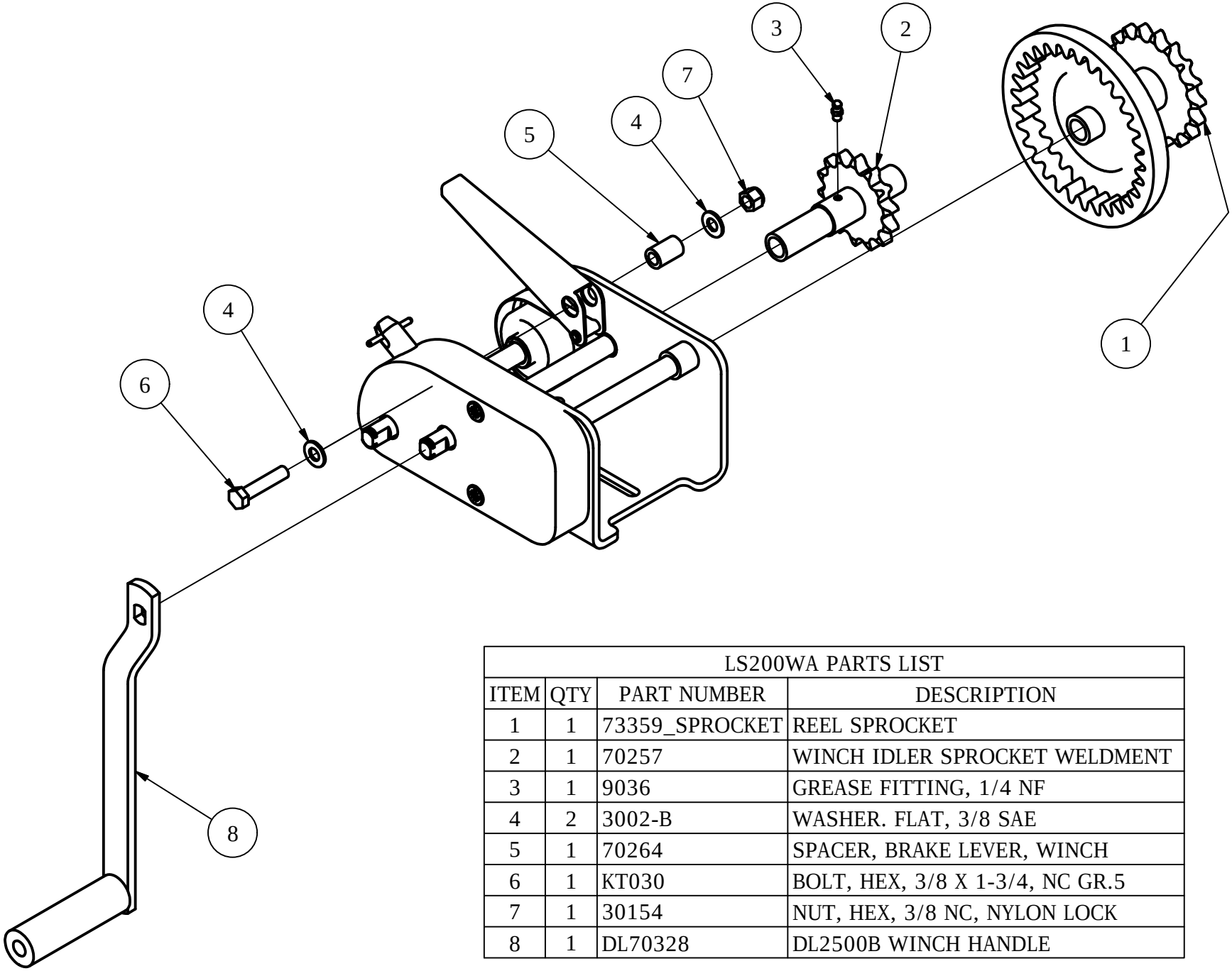

LS200WA PARTS LIST			
ITEM	QTY	PART NUMBER	DESCRIPTION
1	1	73359_SPROCKET	REEL SPROCKET
2	1	70257	WINCH IDLER SPROCKET WELDMENT
3	1	9036	GREASE FITTING, 1/4 NF
4	2	3002-B	WASHER. FLAT, 3/8 SAE
5	1	70264	SPACER, BRAKE LEVER, WINCH
6	1	KT030	BOLT, HEX, 3/8 X 1-3/4, NC GR.5
7	1	30154	NUT, HEX, 3/8 NC, NYLON LOCK
8	1	DL70328	DL2500B WINCH HANDLE